TeSys contactors

For auto-transformer starting

Applications

Auto-transformer starting is suitable for starting all types of squirrel cage motors: with 3, 6 or even 9 terminals according to North American technology.

Starting is performed at reduced voltage and produces maximum torque at minimum line current.
It allows the starting torque (C = f(U)^2) to be adapted to the resistive torque of the driven machine by means of the 2 or 3 intermediate voltage take-off connections on the auto-transformer (0.65 and 0.8 Un or 0.5, 0.65 and 0.8 Un). In general, only one take-off connection is used.

This type of starting is used for high power and/or high inertia machines.
The motor is never disconnected from its power supply during starting (closed transition) and transient phenomena are eliminated.

Recommended wiring scheme

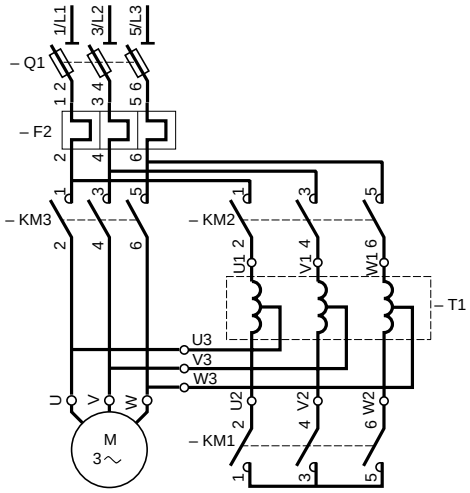

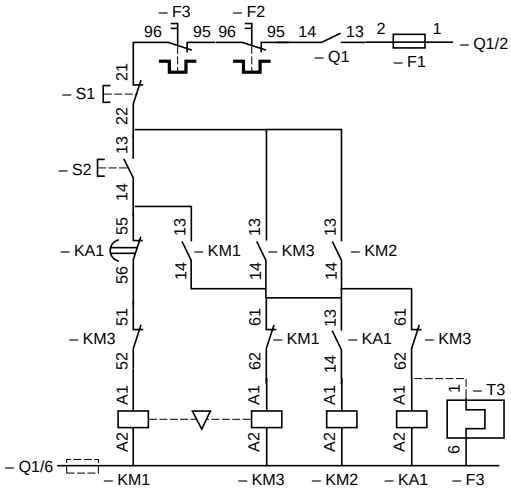

Operation

Starting is performed in 3 stages:

- star connection of the auto-transformer is made by KM1, then contactor KM2 closes and the motor starts under reduced voltage;
- the neutral point is opened by KM1; part of the auto-transformer winding is switched into each phase for a short moment, constituting a stator starting inductance;
- KM3 switches the motor to full mains voltage and causes the auto-transformer to be shunted out of circuit by KM2.

The auto-transformer used generally has an air gap (adjusted or not) in order to obtain, during the second phase of starting, a series inductance whose value is compatible with correct starting.

Operating curves

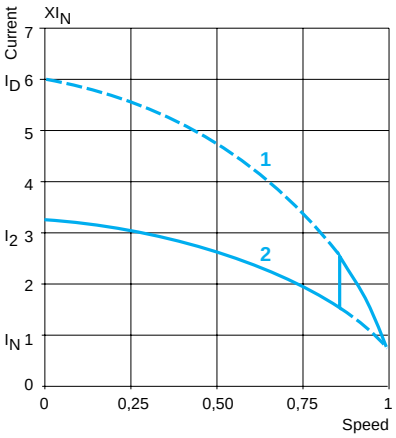

1 Direct switching current
2 Current with auto-transformer

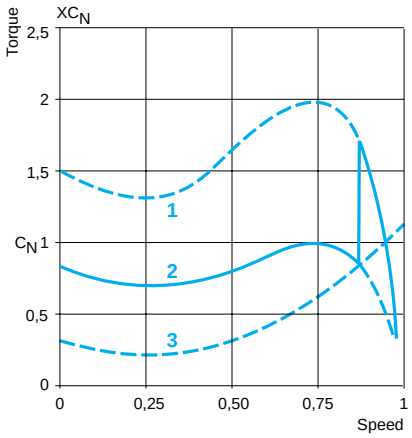

1 Direct motor torque
2 Torque with auto-transformer
3 Resistive torque of the machine

Telemecanique

TeSys contactors
For auto-transformer starting

Auto-transformer starters from 59 to 900 kW up to 440 V (type 1 coordination)

The components recommended in the table below have been determined according to the following characteristics:
- auto-transformer: on 0.65 Un connection with non adjusted air gap,
- 3 starts per hour, of which 2 consecutive,
- Motor starting current: Id/In = 6,
- Iq = 70 kA,
- Transient current on closing of KM3 ⩽ 7 $\sqrt{2}$ In,
- Maximum starting time: 30 seconds,
- Ambient temperature θ ⩽ 40 °C.

Switch-disconnector-fuses: operators and accessories, please consult your Regional Sales Office.
Contactors: 3-pole.
LC1 D: see pages 24501/2 and 24501/3,
LC1 F: please consult your Regional Sales Office,
LC1 B: please consult your Regional Sales Office.

Auxiliary contact blocks:
- for contactors LC1 D: one LAD N11 (1 N/O + 1 N/C) on KM1,
- for contactors LC1 F: one LAD N22 (2 N/O + 2 N/C) on KM1, KM2 and KM3.

Thermal overload relays:
- LR: see pages 24514/2 to 24515/3,
- LR9 D: see pages 24514/3 to 24515/3,
- LR9 F: please consult your Regional Sales Office.

Standard power ratings of 3-phase motors 50/60 Hz in category AC-3					Switch-disconnector-fuse Reference	aM fuses		Contactors			Overload relays	
						Size	Rating	KM3 LC1	KM2 LC1	KM1 LC1	Reference (1)	Setting range
220/ 230 V	380/ 400 V	415 V	440 V	In max								
kW	kW	kW	kW	A			A					A
30	55	59	59	105	**GS1 K**	22 x 58	125	**D115**	**D115**	**D3210**	**LR9 D5369**	90…150
											LRD 4367	95…120
40	75	80	80	138	**GS1 L**	T0	160	**D150**	**D115**	**D5011**	**LR9 D5369**	90…150
											LRD 4369	110…140
51	90	90	100	170	**GS1 N**	T1	200	**F185**	**D115**	**D5011**	**LR9 F5371**	132…220
63	110	110	110	205	**GS1 N**	T1	250	**F225**	**D150**	**D8011**	**LR9 F5371**	132…220
75	132	132	150	245	**GS1 N**	T1	250	**F265**	**F185**	**D115**	**LR9 F5375**	200…330
90	160	160	185	300	**GS1 QQ**	T2	315	**F330**	**F265**	**D115**	**LR9 F5375**	200…330
110	200	200	220	370	**GS1 QQ**	T2	400	**F400**	**F330**	**D115**	**LR9 F5379**	300…500
140	250	257	280	460	**GS1 S**	T3	500	**F500**	**F400**	**D115**	**LR9 F5379**	300…500
180	315	355	375	584	**GS1 S**	T3	630	**F630**	**F400**	**D185**	**LR9 F5381**	380…630
200	355	375	400	635	**GS1 V**	T4	800	**F800**	**F500**	**F185**	**TC800/1** + **LRD 05**	505…800
220	400	425	450	710	**GS1 V**	T4	800	**F800**	**F500**	**F265**	**TC800/1** + **LRD 05**	505…800
250	450	475	500	800	**GS1 V**	T4	800	**F800**	**F500**	**F265**	**TC1000/1** + **LRD 05**	630…1000
280	500	530	560	900	**GS1 V**	T4	1000	**BM33●22**	**F630**	**F330**	**TC1000/1** **LRD 05**	630…1000
315	560	600	630	1000	**GS1 V**	T4	1000	**BM33●22**	**F630**	**F400**	**TC1250/1** **LRD 05**	790…1250
335	630	670	710	1100	**GS1 V**	T4	1250	**BP33●22**	**F630**	**F400**	**TC1250/1** **LRD 05**	790…1250
400	710	750	800	1260	**On base**	T4	2 x 800 *(2)*	**BP33●22**	**F780**	**F400**	**TC1500/1** **LRD 05**	945…1500
450	800	800	800	1450	**On base**	T4	2 x 800 *(2)*	**BP33●22**	**F780**	**F400**	**TC1750/1** **LRD 05**	100…1750
500	900	900	900	1600	**On base**	T4	2 x 800 *(2)*	**BR33●22**	**F780**	**F500**	**TC2000/1** **LRD 05**	260…2000

(1) For power ratings greater than or equal to 400 kW at 415 V, use one LRD-05 on the current transformer.
(2) Check with the motor manufacturer whether the fuses should be fitted in parallel.